KmB.4

Power, strength and reduced weight.

SPECIFICATIONS

Rotary head and rod holder	
Holding capacity	28 000 lbs (12 700 kg)
Spindle interior dimension	4.9 in (124 mm) PWL Rod
Chuck operation	Spring closed and hydraulically opened
Final drive	HV 60-2 chain in an oil bath
Hydraulic motor	80 cc variable
Transmission	HI-LO 2 speed mechanic
Rotary head ratio	1:2
Lubrication	Pump pressurized, filter and cooler
Speed	0 to 1 300 RPM

FEATURES AND BENEFITS

- Underground or surface version
- Heliportable
- Made of steel
- Depth capacity:
  200 m (655 ft) N size
- Total weight in undergroung configuration:
  5 454 lbs (2 475 kg)

TMG Drilling Supplies • Ofibodegas Milano B16, Costa Rica
Teléfono: (506) 4001-5984 info@tmgdrill.com • www.tmgdrill.com

VersaDrill CANADA

kmB.4
UNDERGROUND DRILL

Filtration
10 micron absolute filter on return line
High pressure filter
One strainer inside the hydraulic tank connected to the suction

Hydraulic module	
Floating rotary head Torque limit on rotary head	
Hydraulic Pump	246 l/min (65 US gal/min) @ 1 800 RPM (max 4 000 psi (275 bar))
System Drive	Open loop, Load-sensing circuit
Hydraulic Pressurized Tank	34 US gal. (128 l)
Oil Heat Exchanger	Water cooling (Air cooler optional)

Weight	
Electric power unit	1 352 lbs (613 kg)
Diesel power unit	1 200 lbs (545 kg)
Hydraulic pump and tank	884 lbs (400 kg) wet
Control panel	250 lbs (113 kg)
Drill head	550 lbs (249 kg)
Drill head hydraulic motor	70 lbs (32 kg)
Drill head transmission	85 lbs (39 kg)
Rod holder	254 lbs (115 kg)
Feed frame assy (extension and pulley included)	595 lbs (269 kg)
Mast base	514 lbs (233 kg)
Wireline hoist	100 lbs (45 kg)
Surface mast	800 lbs (363 kg)

Feed frame	
Head stroke	34.5 in (876 mm)
Raising speed	300 ft/min (91 m/min)
Lowering speed	300 ft/min (91 m/min)
Pull capacity	15 000 lbs (6 800 kg) @ 4000 psi
Push capacity	15 000 lbs (6 800 kg) @ 4000 psi
Possible angle (Underground version)	-90 to 90 degrees

Surface mast	
Pull speed	300 ft/min (91 m/min)
Speed of descent	300 ft/min (91 m/min)
Single line pull capacity	6 500 lbs (2 950 kg) @ 4 000 psi
Rod pull length	10 ft (3 m)

2-Speed transmission			
Speed	**Ratio**	**RPM**	**Maximum Torque**
LO	3.46:1	0-361	2 098 lbs*ft (2 840 N*m) @ 361 RPM
HI	1:1	0-1 300	606 lbs*ft (820 N*m) @ 1 300 RPM
Speed and torque based on a 80 cc hydraulic motor at 4 000 psi (275 bar)			

Wireline hoist	
Cable capacity (3/16 in - 4.8 mm)	2 000 ft (600 m)
Empty pull capacity	2 000 lbs (907 kg)
Full pull capacity	650 lbs (295 kg)
Variable speed as needed	

Drilling capacity			
*Dimension recommended for maximum performance		**Rock**	**Cement**
	*B 2 3/16 in (55,6 mm)	1 950 ft (600 m)	2 145 ft (654 m)
	*N 2 3/4 in (69,9 mm)	1 300 ft (400 m)	1 430 ft (436 m)
	H 3 1/2 in (88,9 mm)	430 ft (130 m)	473 ft (144 m)
	H casing 4 1/2 in (14.3 mm)	150 ft (45 m)	165 ft (50 m)
Drilling capacity is calculated on a 90-degree down hole and will depend on in-hole tools, ground conditions, drilling techniques and equipment used.			
Recommended electric engine: 100 hp (75 Kw) at 1 800 RPM Recommended diesel engine: 155 hp (157 Kw) at 2 100 RPM			

TMG Drilling Supplies • Ofibodegas Milano B16, Costa Rica
Teléfono: (506) 4001-5984 info@tmgdrill.com • www.tmgdrill.com

DIMENSIONS

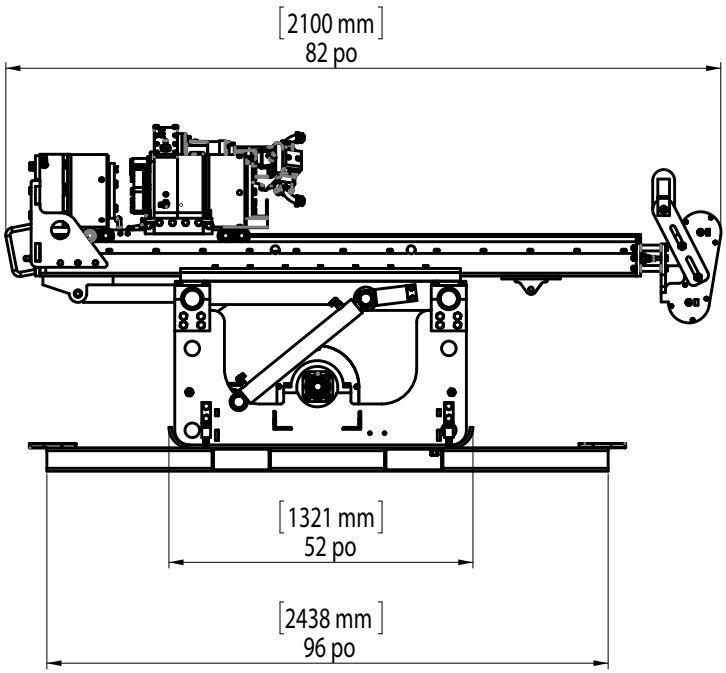

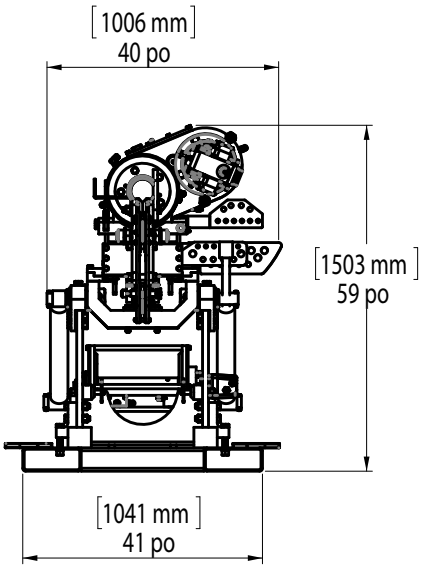

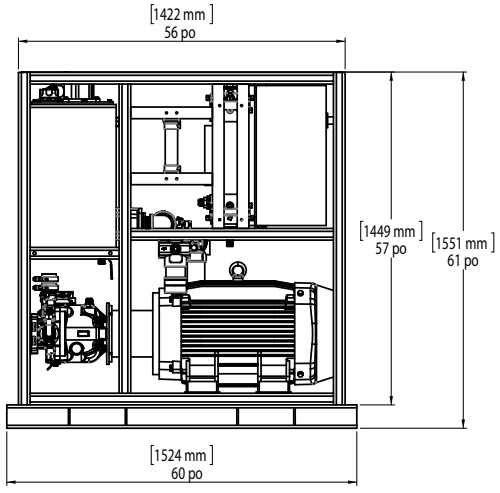

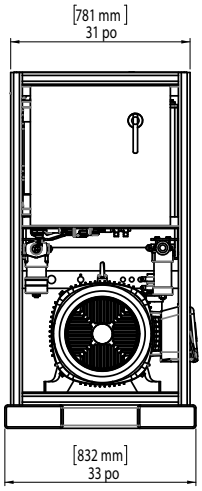

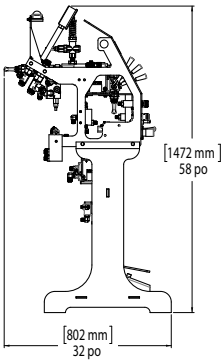

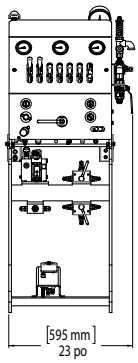

TMG Drilling Supplies • Ofibodegas Milano B16, Costa Rica
Teléfono: (506) 4001-5984 info@tmgdrill.com • www.tmgdrill.com

Field experience. **Real** experience.

TMG
Drilling Supplies

TMG Drilling Supplies
Ofibodegas Milano B16, Costa Rica
Teléfono: (506) 4001-5984
info@tmgdrill.com • www.tmgdrill.com